ROUND DOWNSPOUT + ACCESSORIES

ELBOWS ③

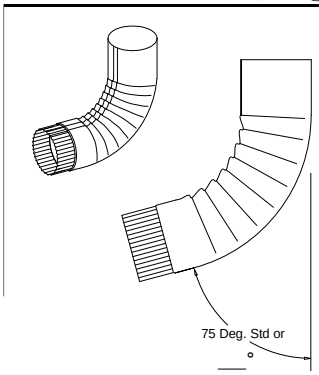

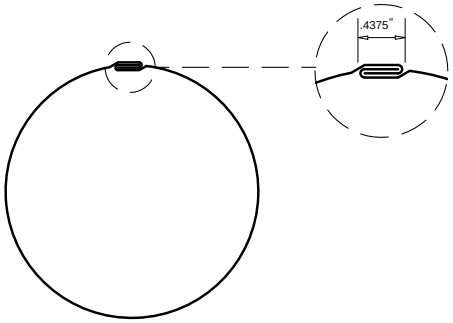

ROUND DOWNSPOUT

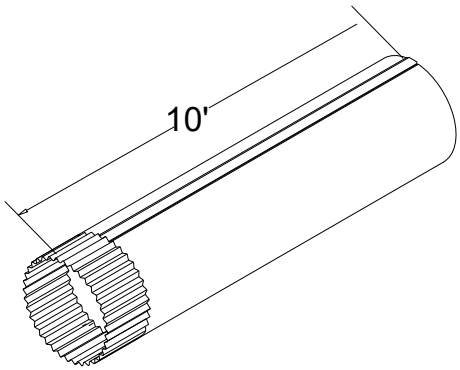

ONE-PIECE OFFSETS ③

"UP" STYLE (EAVE)

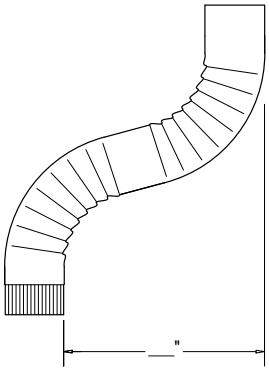

"DOWN" STYLE (LEDGE)

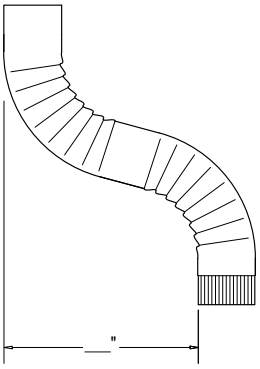

OUTLET TUBES

TYPE A-FLAT TOP

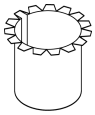

TYPE B -HALF-ROUND TOP

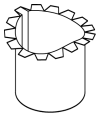

STRAPS

1.625" WIDE WITH .25" HEM

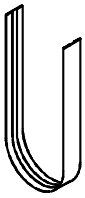

SIZE:

- ☐ 3" ROUND DOWNSPOUT ①
- ☐ 4" ROUND DOWNSPOUT
- ☐ 5" ROUND DOWNSPOUT
- ☐ 6" ROUND DOWNSPOUT
- ☐ 7" ROUND DOWNSPOUT ③
- ☐ 8" ROUND DOWNSPOUT ③
- ☐ 9" ROUND DOWNSPOUT ③
- ☐ 10" ROUND DOWNSPOUT ③

NOTES:

① Not available in 22ga steel or .050 aluminum.
② For products/material not listed, please inquire.
③ Elbows and offsets that are 7" and larger will be mitered and caulked.
④ Colors are only available for Galvalume and Aluminum

MATERIAL②

- ☐ 22GA GALVALUME®
- ☐ 24GA GALVALUME®
- ☐ 22GA STAINLESS STEEL
- ☐ 24GA STAINLESS STEEL
- ☐ 16OZ COPPER
- ☐ 20OZ COPPER
- ☐ .032 ALUMINUM
- ☐ .040 ALUMINUM
- ☐ .050 ALUMINUM
- ☐ 22GA/.8MM NEDZINK
- ☐ 24GA/.7MM NEDZINK

④ **COLOR**: Select Color

QUANTITIES:

_____ LINEAL FEET@ 10 '-0" LENGTHS

_____OUTLETS STYLE A _____STYLE B_____

_____ELBOWS (STD. 75°)③

_____ELBOWS (CUSTOM DEGREE) ____°

_____ONE-PIECE OFFSETS " OFFSET AMOUNT ③

_____STRAPS (STANDARD =2 PER 10' DOWNSPOUT)

RESET FORM

Please forward completed form to sales@dmimetals.com or your respective Territory Manager.

PRINT APPROVED BY:

(SIGNATURE) (DATE)

A SIGNED PRINT APPROVAL SIGNIFIES A CUSTOMER HAS VERIFIED ALL DIMENSIONS, SIZES, QUANTITIES, AND MATERIAL TYPES.

FABRICATION WILL PROCEED ONLY AFTER RECEIPT OF SIGNED PRINT APPROVAL

PROJECT INFORMATION

(PROJECT NAME)

(ARCHITECT)

(CUSTOMER)

58 Klema Drive N
Reynoldsburg, Ohio 43068
800-828-1510
sales@dmimetals.com
www.dmimetals.com