FASTENERS TO PENETRATE WOOD SHEETING
3/4" MIN. AND METAL FRAMING 1/2" MIN.

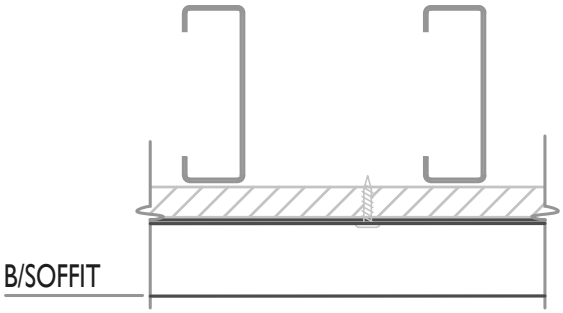

SECTION "A-A"

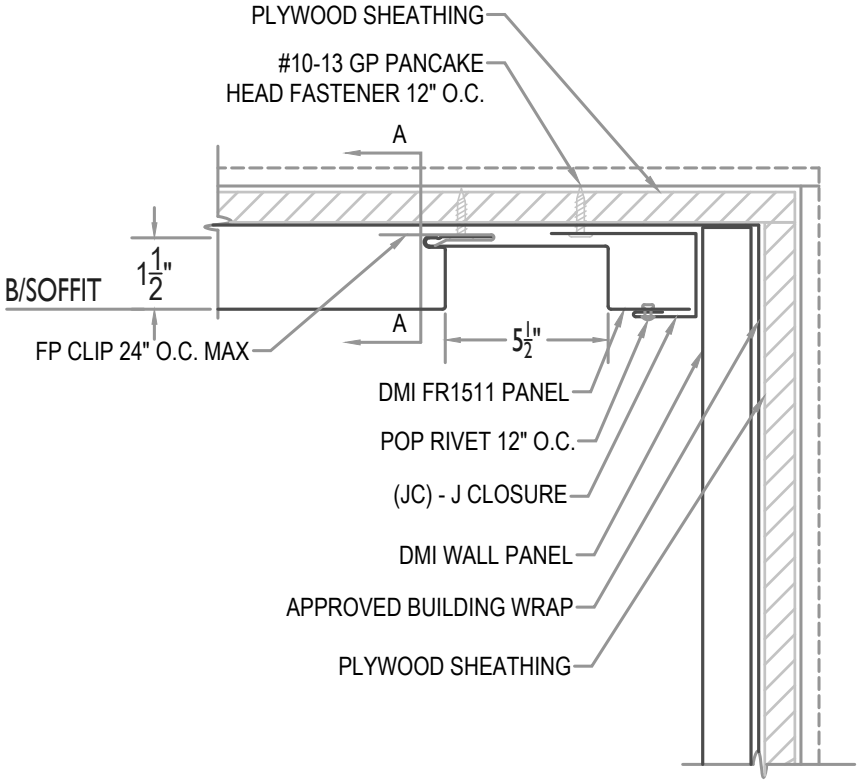

DMI DIMENSIONAL METALS, INC.

SOFFIT TO WALL PANEL

Detail: FR15-H-01-00

●PROVEN ● DEPENDABLE ● SUSTAINABLE●

METAL ENVELOPE SYSTEMS SINCE 1988

WWW.DMIMETALS.COM

Issue/Rev Date:	Scale:
01/17	3"=1'-0"

FASTENERS TO PENETRATE WOOD SHEETING 3/4" MIN. AND METAL FRAMING 1/2" MIN.

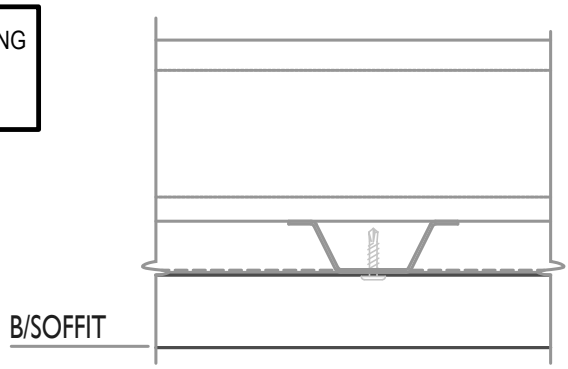

SECTION "A-A"

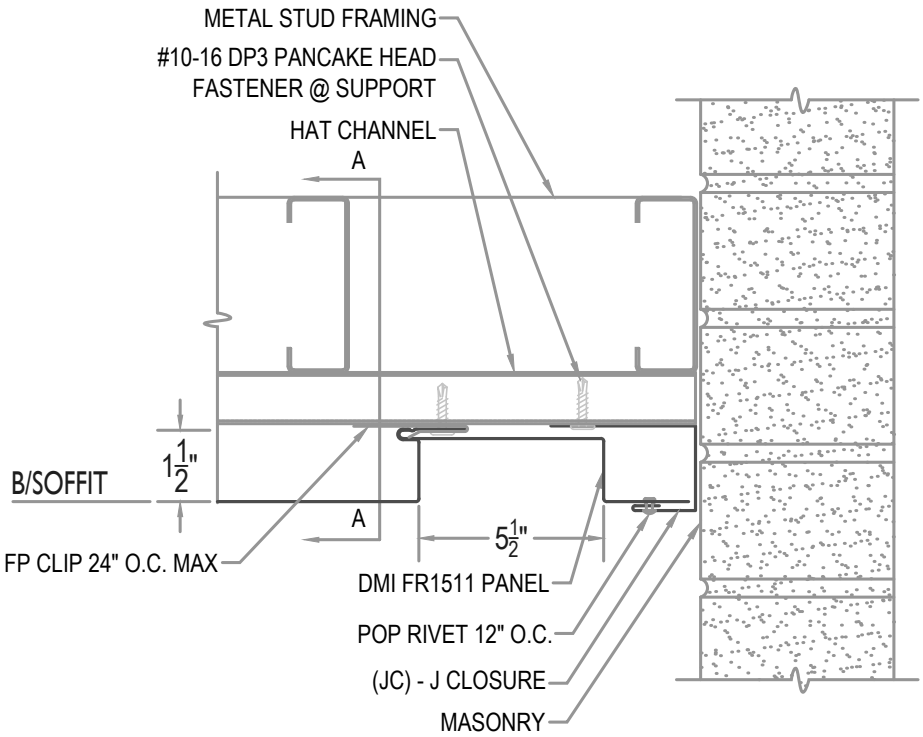

DMI DIMENSIONAL METALS, INC.

SOFFIT ENDWALL

Detail: FR15-H-01-01

●PROVEN ● DEPENDABLE ● SUSTAINABLE●

METAL ENVELOPE SYSTEMS SINCE 1988

WWW.DMIMETALS.COM

Issue/Rev Date: 01/17

Scale: 3"=1'-0"

FASTENERS TO PENETRATE WOOD SHEETING
3/4" MIN. AND METAL FRAMING 1/2" MIN.

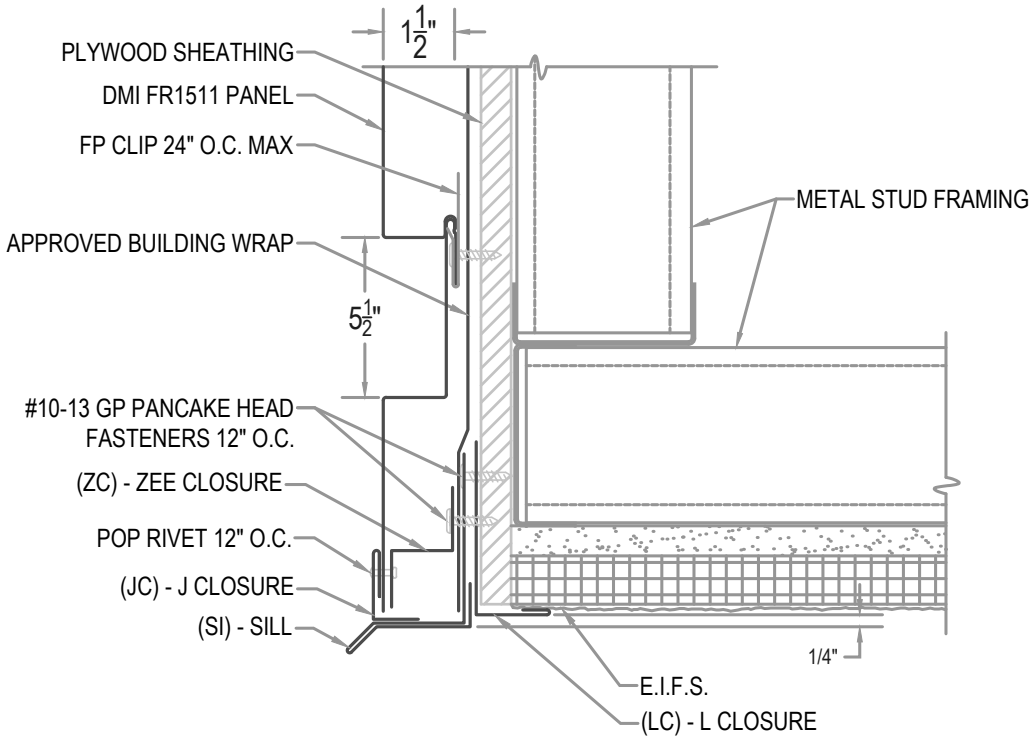

DMI DIMENSIONAL METALS, INC.

WALL PANEL W/ SILL (EIFS SOFFIT)

Detail: FR15-H-02-00

●PROVEN ● DEPENDABLE ● SUSTAINABLE●

METAL ENVELOPE SYSTEMS SINCE 1988

WWW.DMIMETALS.COM

Issue/Rev Date:	Scale:
01/17	3"=1'-0"

FASTENERS TO PENETRATE WOOD SHEETING
3/4" MIN. AND METAL FRAMING 1/2" MIN.

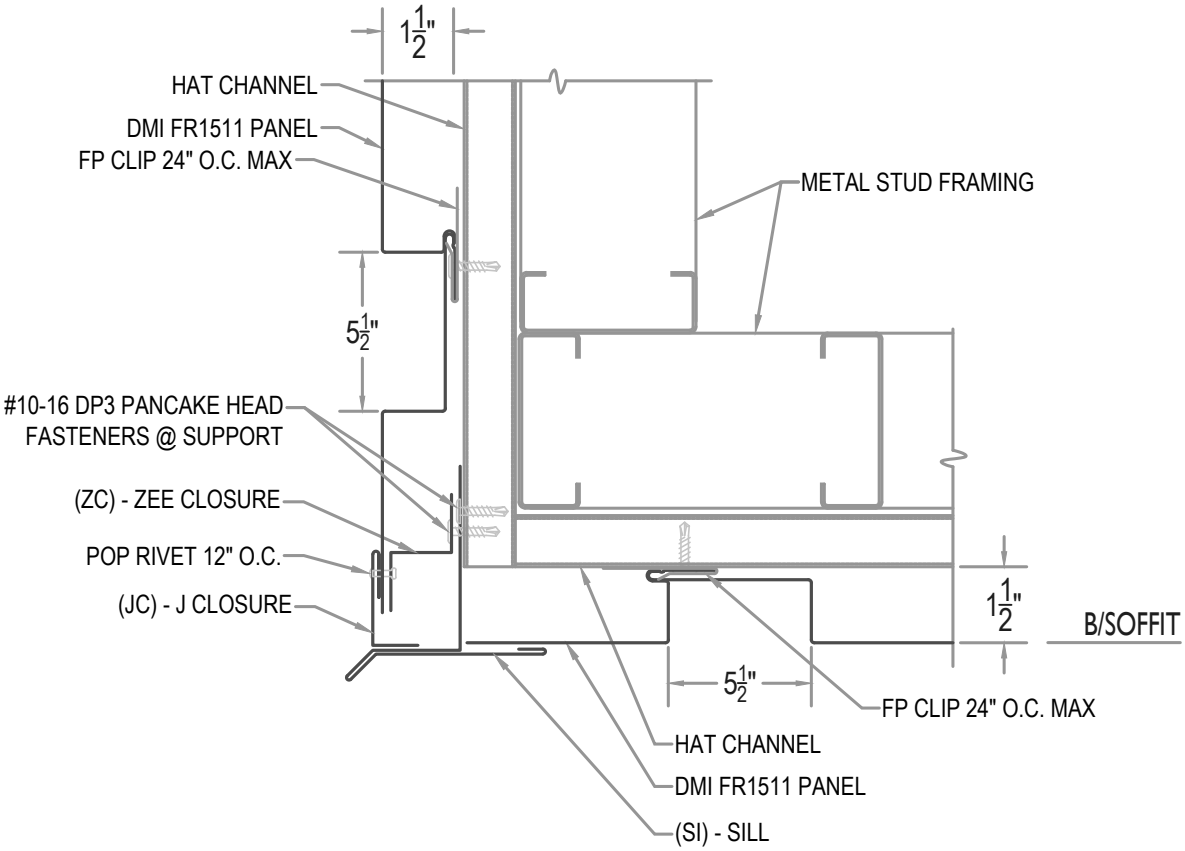

DMI DIMENSIONAL METALS, INC.

WALL PANEL W/ SILL (PANEL SOFFIT)

Detail: FR15-H-02-01

●PROVEN ● DEPENDABLE ● SUSTAINABLE●

METAL ENVELOPE SYSTEMS SINCE 1988

WWW.DMIMETALS.COM

Issue/Rev Date:	Scale:
01/17	3"=1'-0"

FASTENERS TO PENETRATE WOOD SHEETING
3/4" MIN. AND METAL FRAMING 1/2" MIN.

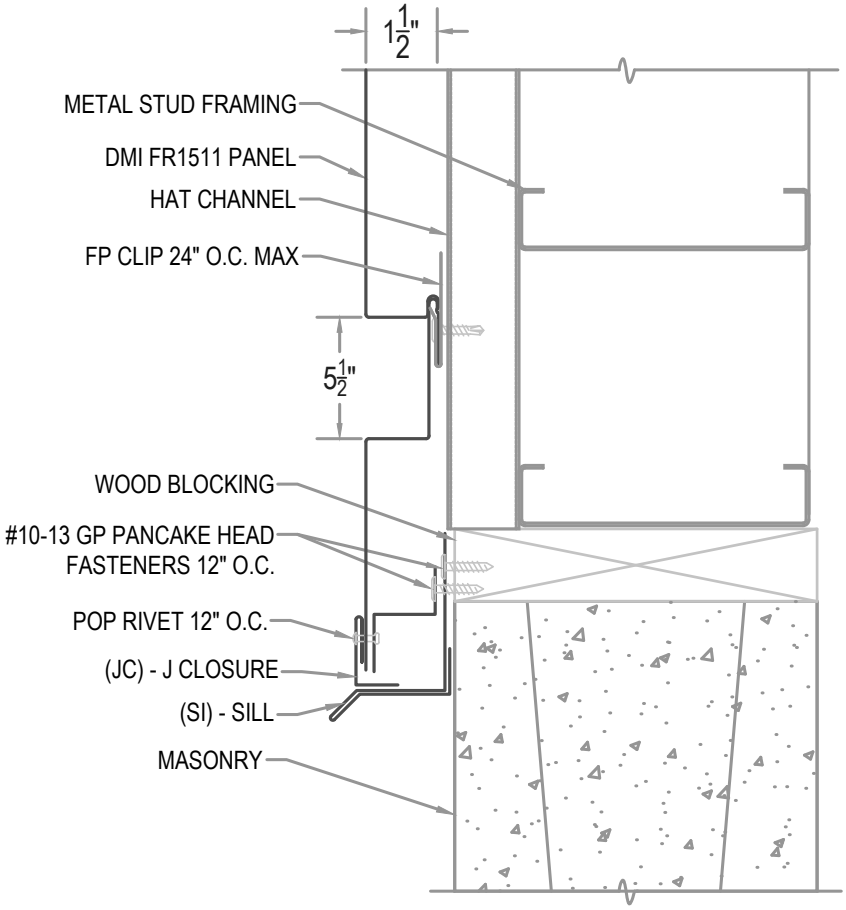

DMI DIMENSIONAL METALS, INC.

WALL PANEL W/ SILL (AT BLOCK)

Detail: FR15-H-02-02

●PROVEN ● DEPENDABLE ● SUSTAINABLE●

METAL ENVELOPE SYSTEMS SINCE 1988

WWW.DMIMETALS.COM

Issue/Rev Date:	Scale:
01/17	3"=1'-0"

FASTENERS TO PENETRATE WOOD SHEETING
3/4" MIN. AND METAL FRAMING 1/2" MIN.

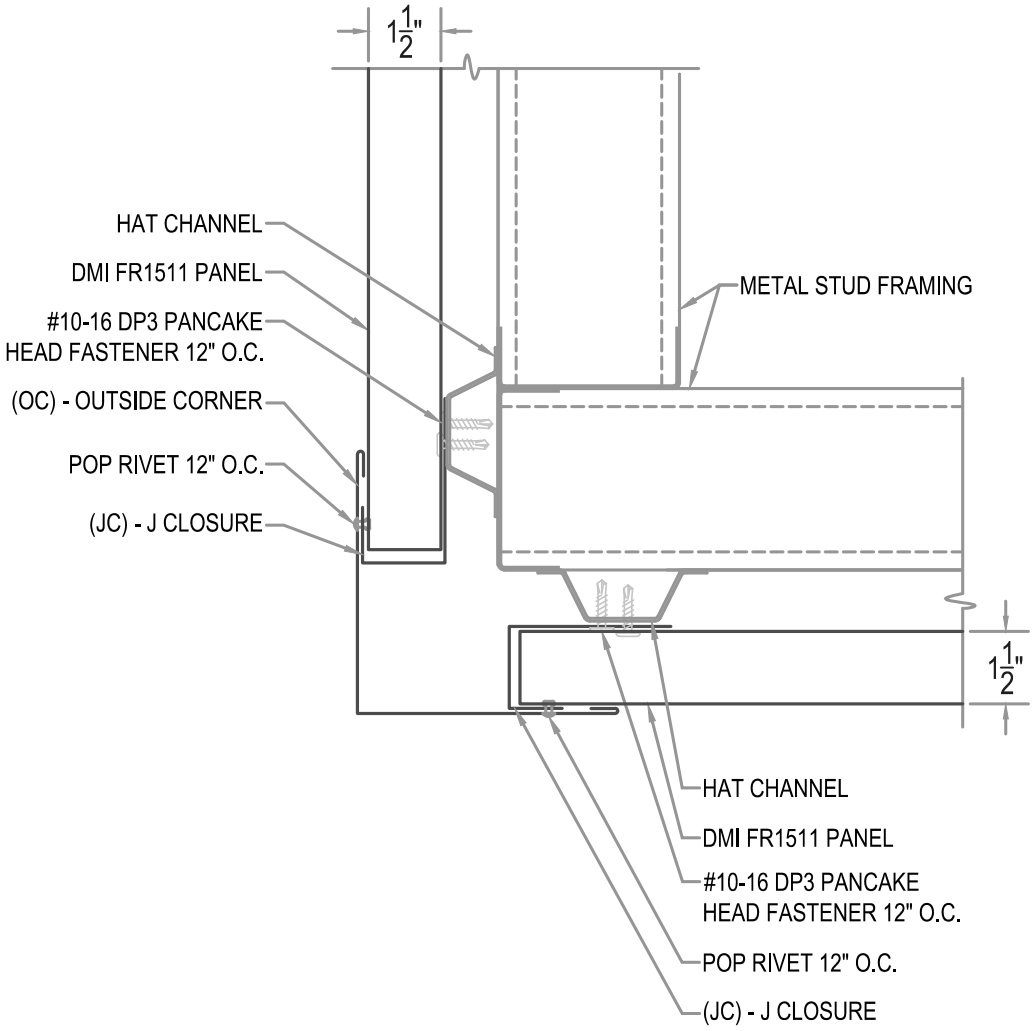

DMI DIMENSIONAL METALS, INC.

OUTSIDE CORNER

Detail: FR15-H-03-00

●PROVEN ● DEPENDABLE ● SUSTAINABLE●

METAL ENVELOPE SYSTEMS SINCE 1988

WWW.DMIMETALS.COM

Issue/Rev Date: 01/17

Scale: 3"=1'-0"

FASTENERS TO PENETRATE WOOD SHEETING
3/4" MIN. AND METAL FRAMING 1/2" MIN.

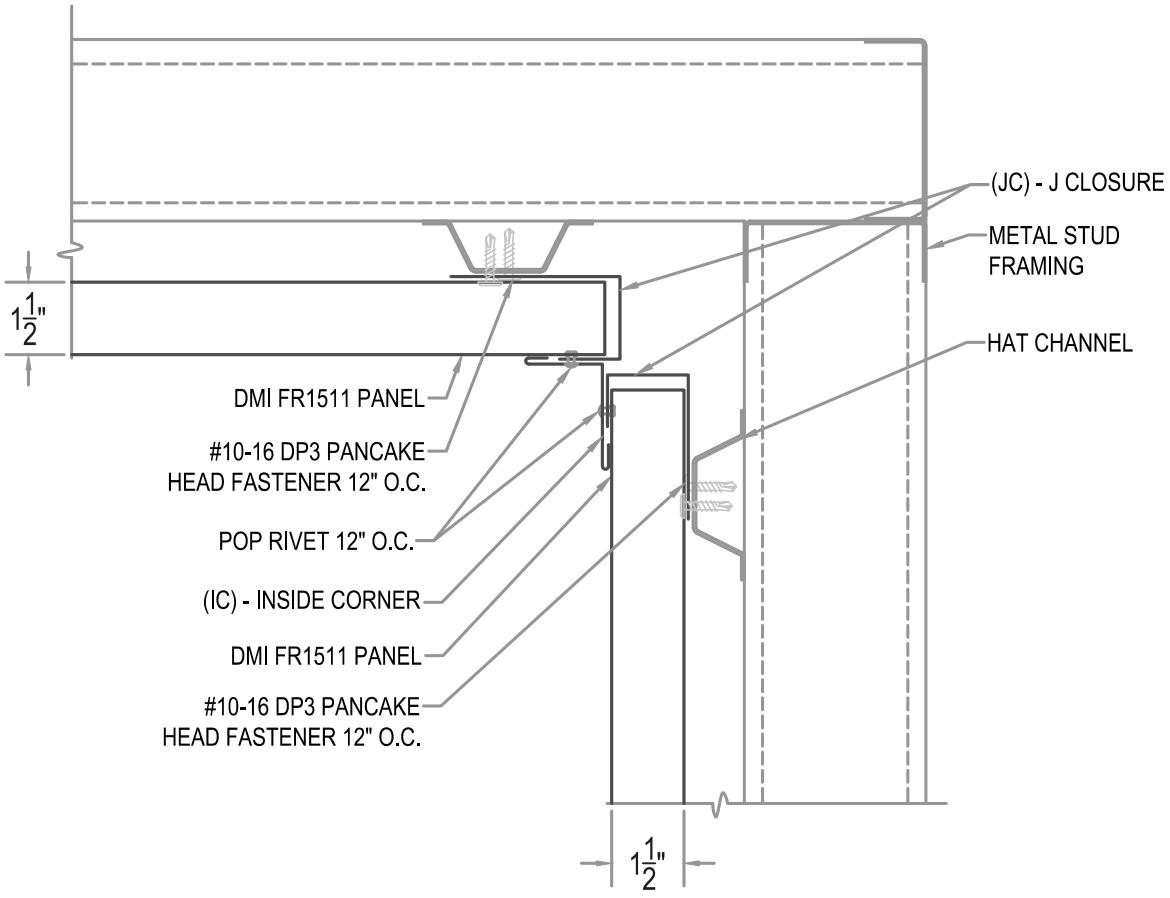

DMI DIMENSIONAL METALS, INC.

INSIDE CORNER

Detail: FR15-H-03-01

●PROVEN ● DEPENDABLE ● SUSTAINABLE●

METAL ENVELOPE SYSTEMS SINCE 1988

WWW.DMIMETALS.COM

Issue/Rev Date:	Scale:
01/17	3"=1'-0"

FASTENERS TO PENETRATE WOOD SHEETING 3/4" MIN. AND METAL FRAMING 1/2" MIN.

SEE DMI DYNACLAD EDGE INSTALLATION GUIDE FOR COMPLETE FASTENING AND INSTALLATION INFORMATION FOR ES-1 RATED SNAP-ON COPING

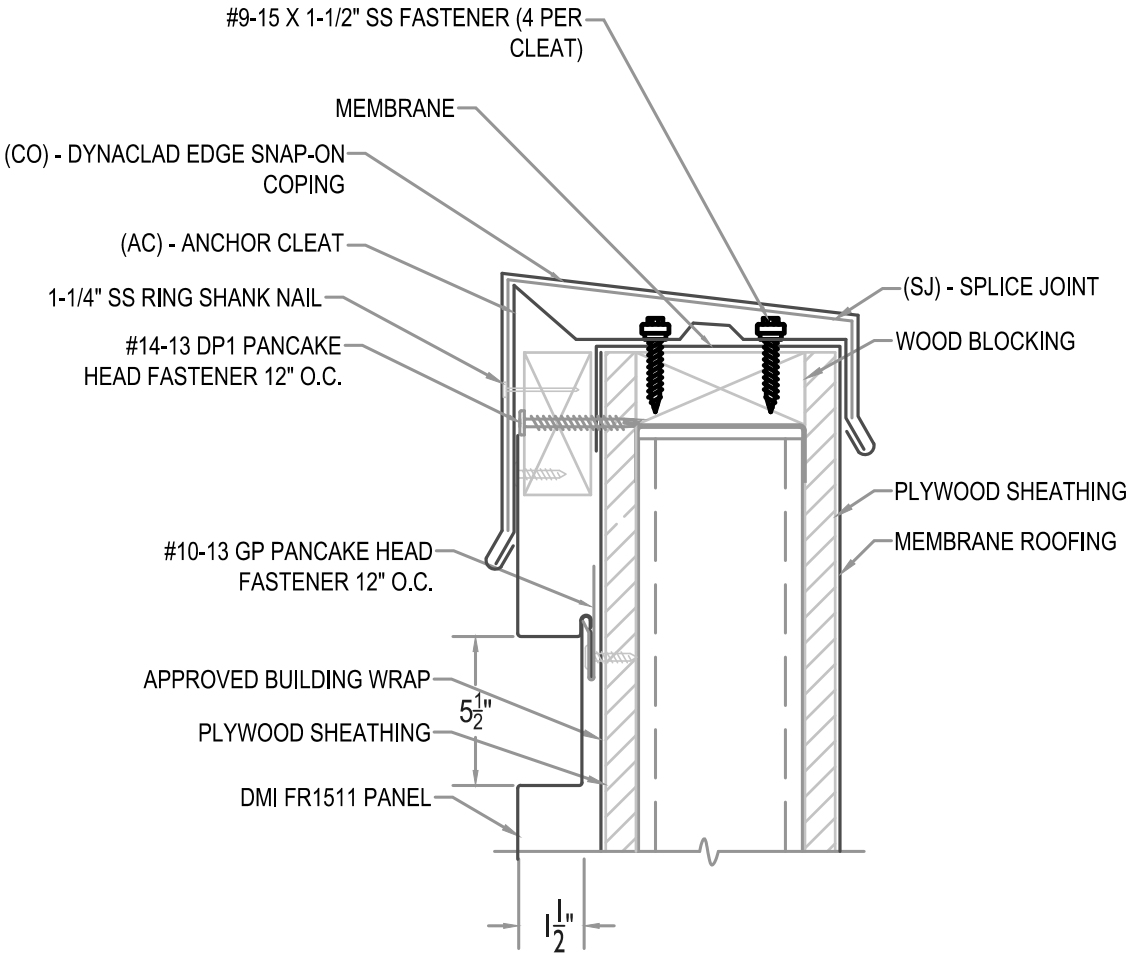

DMI DIMENSIONAL METALS, INC.

COPING WITH WOOD SUBSTRATE

Detail: FR15-H-04-00

●PROVEN ●DEPENDABLE ●SUSTAINABLE●

METAL ENVELOPE SYSTEMS SINCE 1988

WWW.DMIMETALS.COM

Issue/Rev Date: 01/17

Scale: 3"=1'-0"

FASTENERS TO PENETRATE WOOD SHEETING 3/4" MIN. AND METAL FRAMING 1/2" MIN.

SEE DMI DYNACLAD EDGE INSTALLATION GUIDE FOR COMPLETE FASTENING AND INSTALLATION INFORMATION FOR ES-1 RATED SNAP-ON COPING

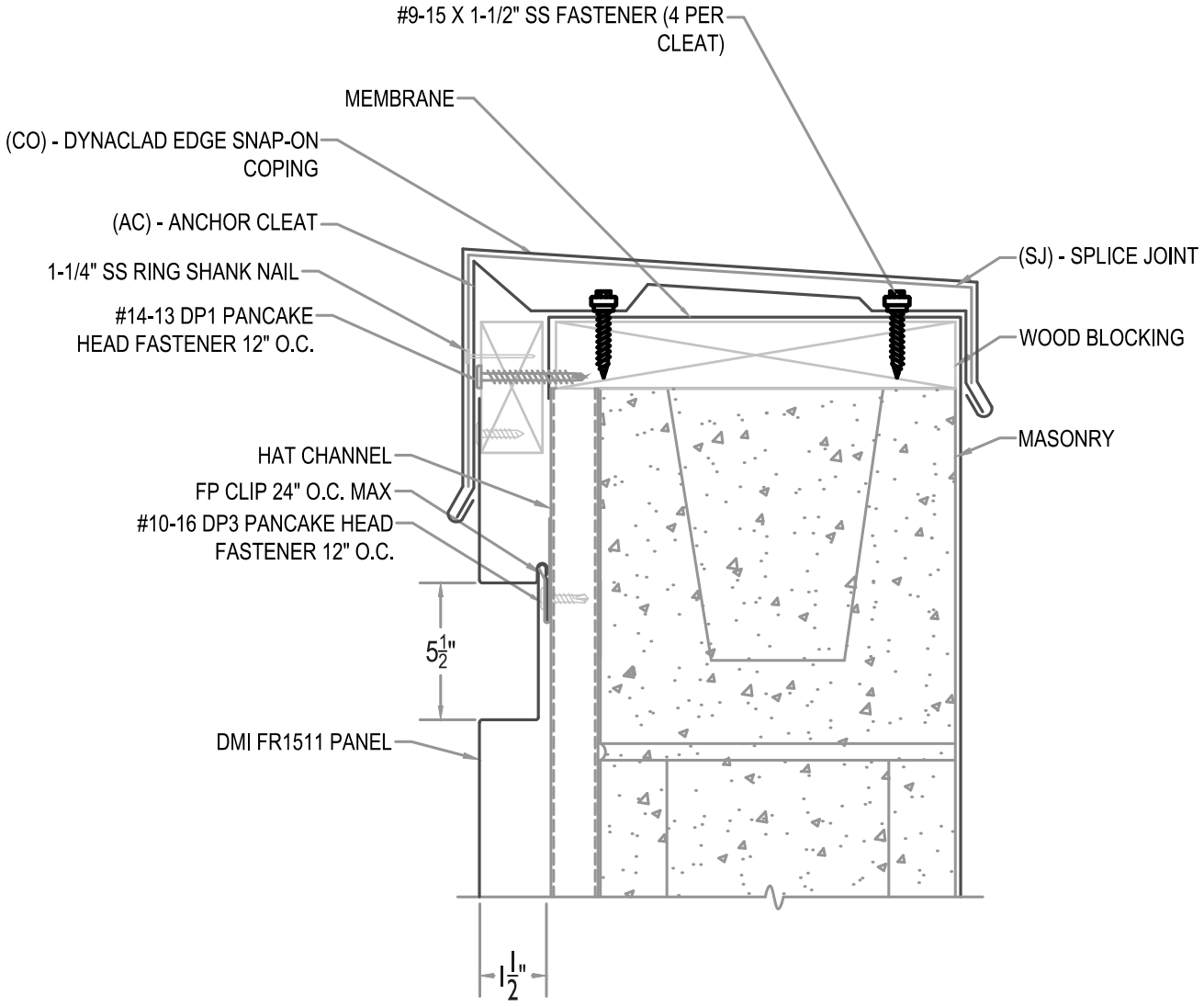

DMI DIMENSIONAL METALS, INC.

COPING WITH HAT CHANNEL

Detail: FR15-H-04-01

●PROVEN ●DEPENDABLE ●SUSTAINABLE●

METAL ENVELOPE SYSTEMS SINCE 1988

WWW.DMIMETALS.COM

Issue/Rev Date:	Scale:
01/17	3"=1'-0"

FASTENERS TO PENETRATE WOOD SHEETING
3/4" MIN. AND METAL FRAMING 1/2" MIN.

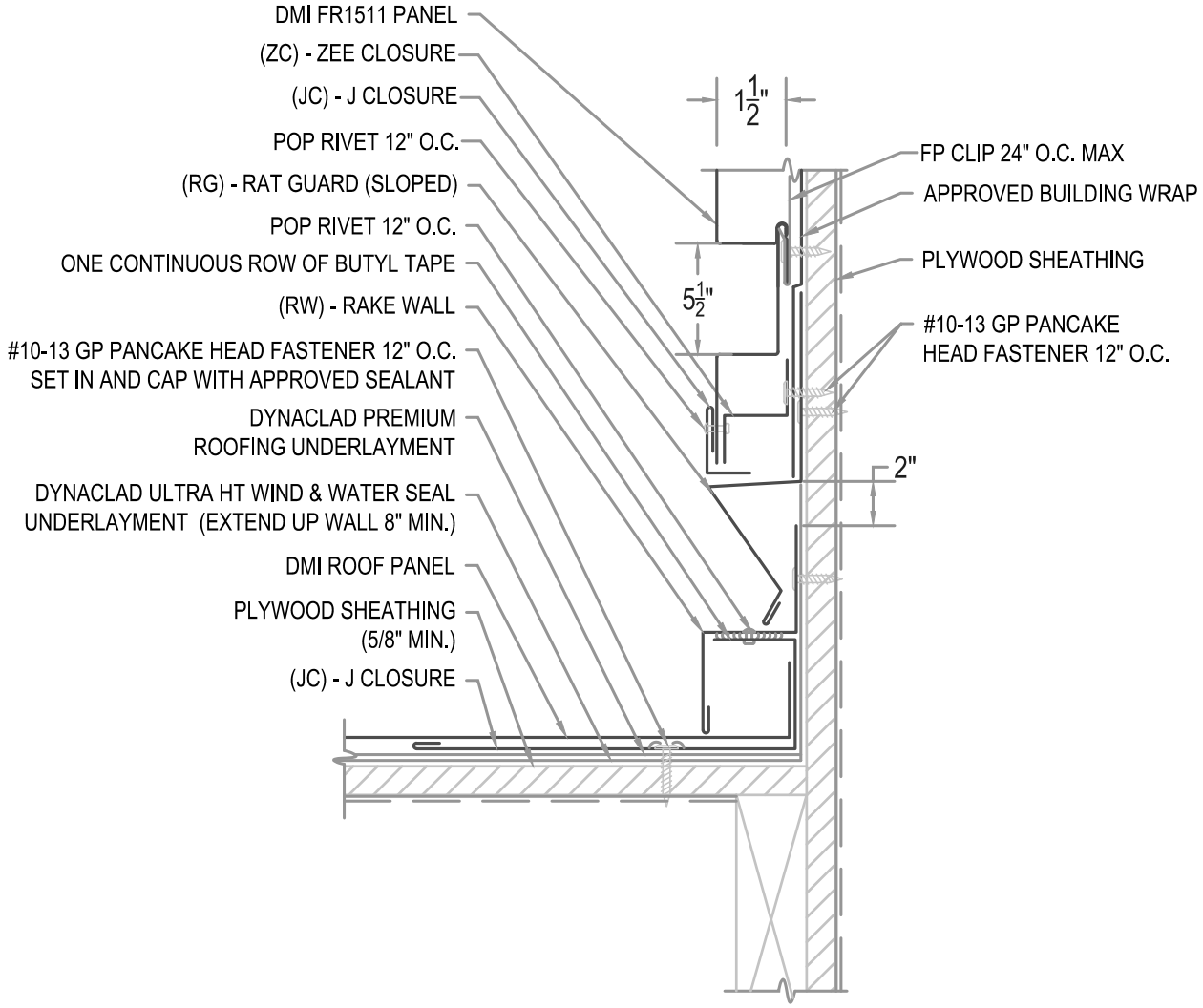

DMI DIMENSIONAL METALS, INC.

RAKE WALL

Detail: FR15-H-05-00

●PROVEN ●DEPENDABLE ●SUSTAINABLE●

METAL ENVELOPE SYSTEMS SINCE 1988

WWW.DMIMETALS.COM

Issue/Rev Date:	Scale:
01/17	3"=1'-0"

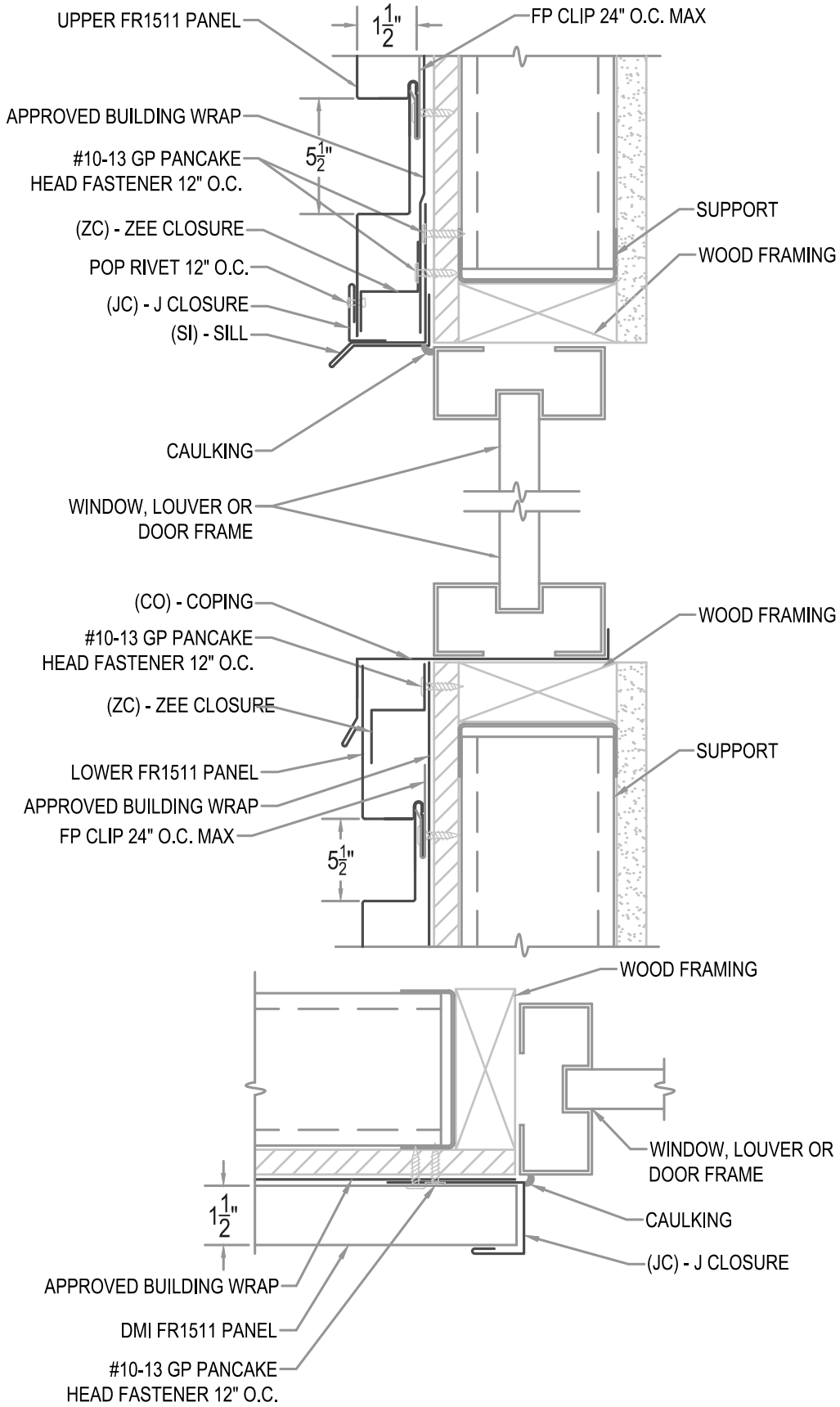

DMI DIMENSIONAL METALS, INC.

OPENING HEAD, SILL AND JAMB

Detail: FR15-H-06-00

●PROVEN ●DEPENDABLE ●SUSTAINABLE●

METAL ENVELOPE SYSTEMS SINCE 1988

WWW.DMIMETALS.COM

Issue/Rev Date: 01/17

Scale: 3"=1'-0"

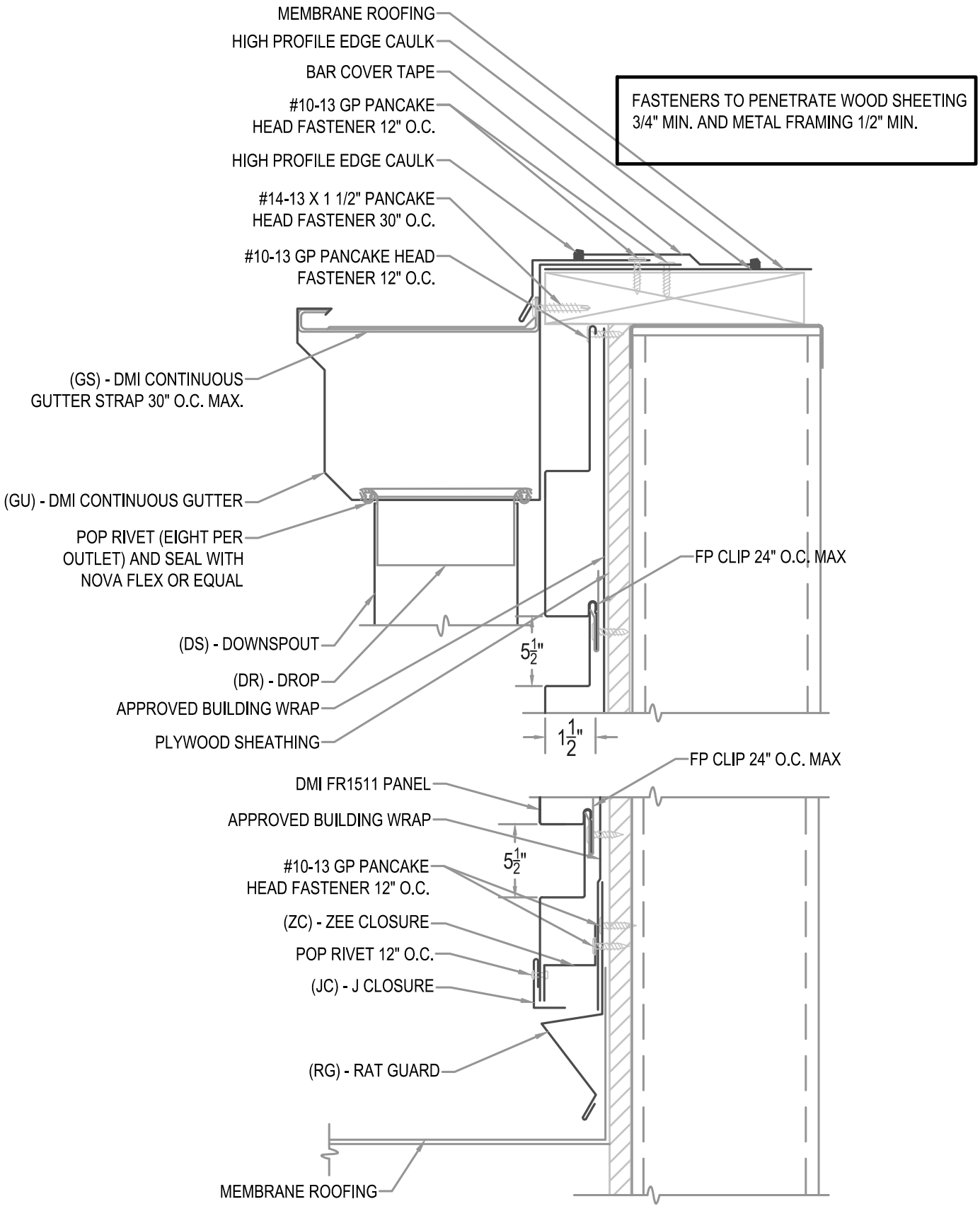

DMI DIMENSIONAL METALS, INC.

WALL SECTION AT MEMBRANE ROOF

Detail: FR15-H-07-00

•PROVEN • DEPENDABLE • SUSTAINABLE•

METAL ENVELOPE SYSTEMS SINCE 1988

WWW.DMIMETALS.COM

Issue/Rev Date:	Scale:
01/17	3"=1'-0"

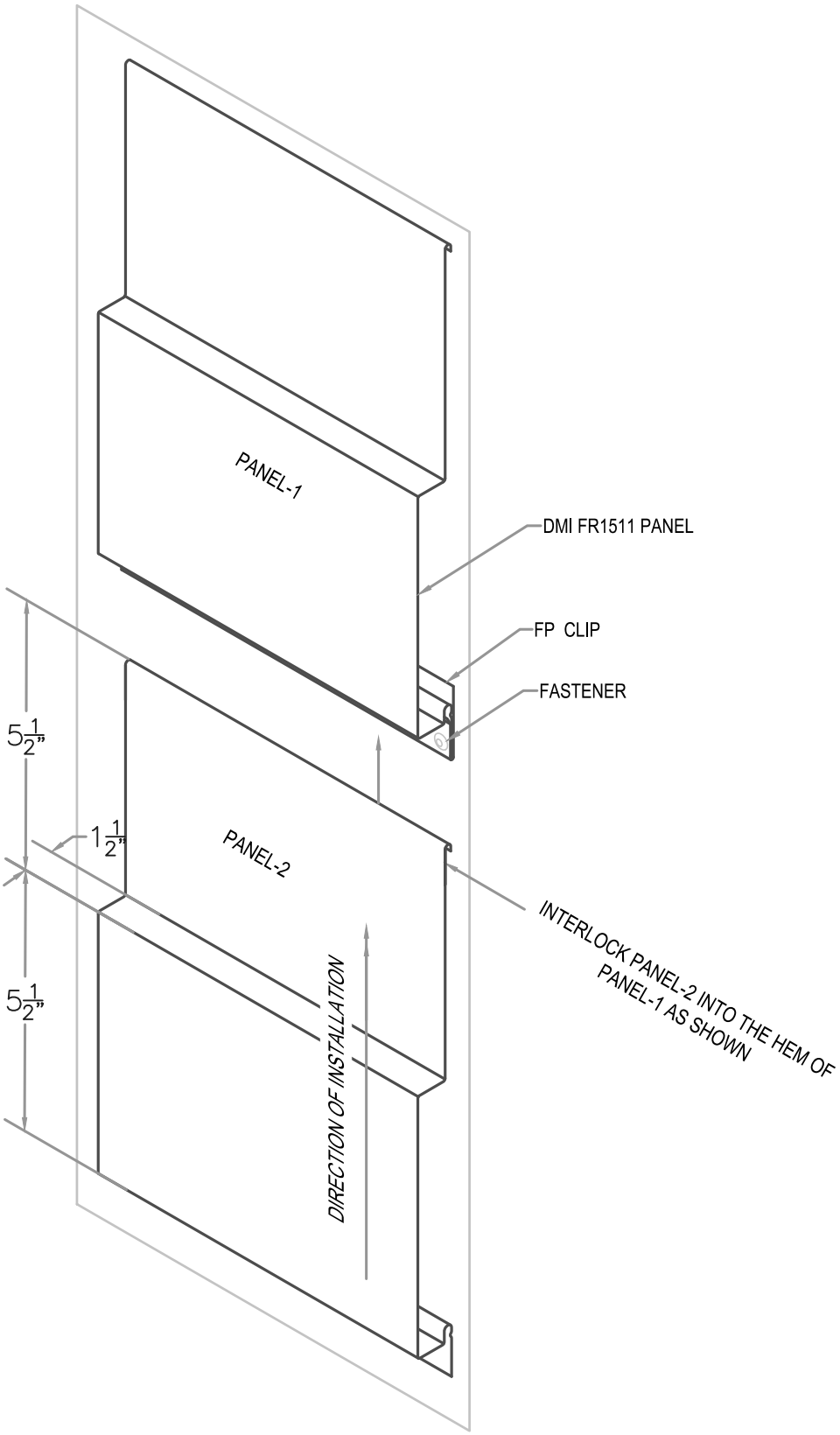

DMI DIMENSIONAL METALS, INC.

PANEL INSTALLATION

Detail: FR15-H-08-00

●PROVEN ●DEPENDABLE ●SUSTAINABLE●

METAL ENVELOPE SYSTEMS SINCE 1988

WWW.DMIMETALS.COM

Issue/Rev Date:	Scale:
01/17	3"=1'-0"

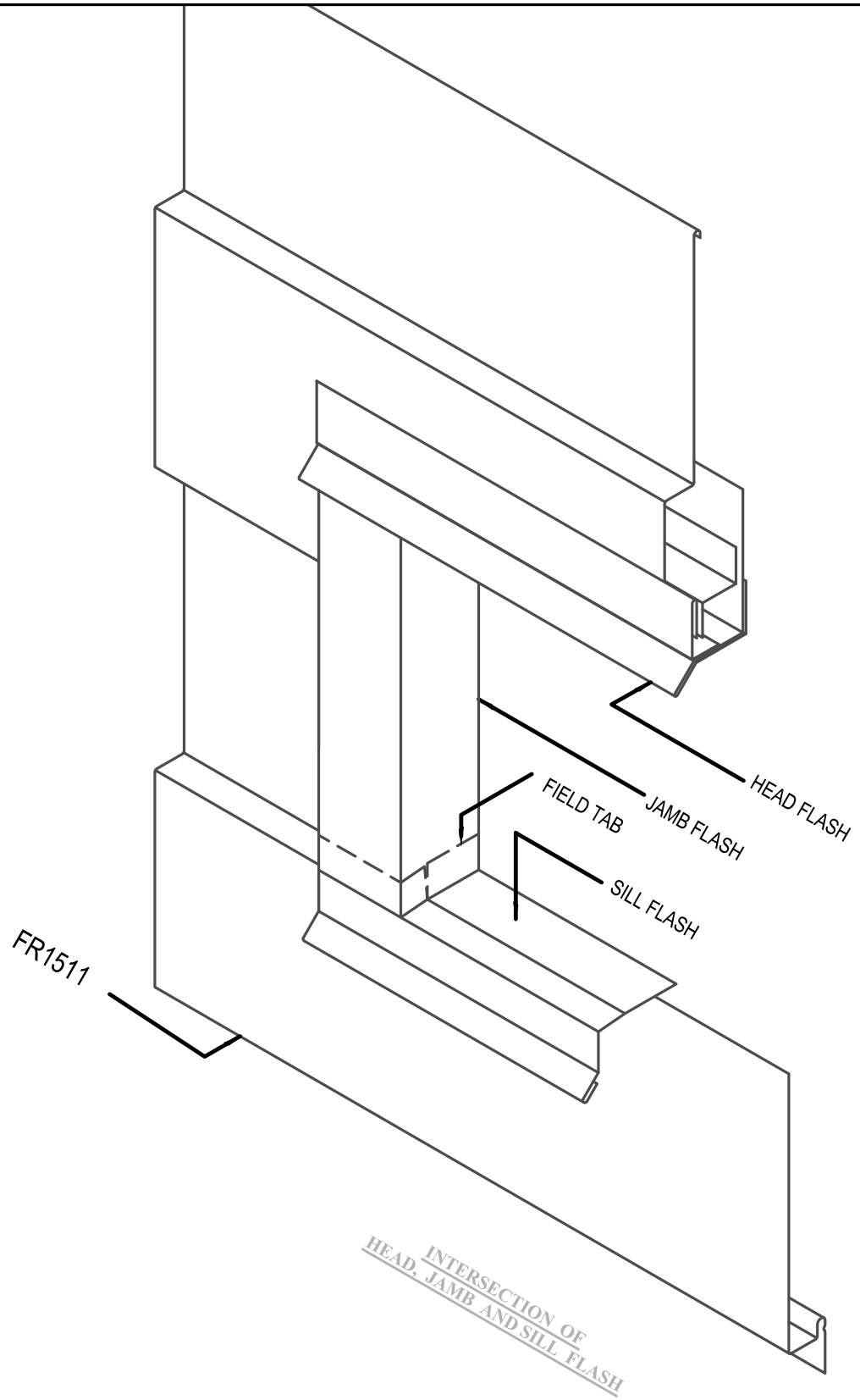

DMI DIMENSIONAL METALS, INC.

ISO HEAD, SILL AND JAMB

Detail: FR15-H-09-00

●PROVEN ● DEPENDABLE ● SUSTAINABLE●

METAL ENVELOPE SYSTEMS SINCE 1988

WWW.DMIMETALS.COM

Issue/Rev Date:	Scale:
01/17	3"=1'-0"

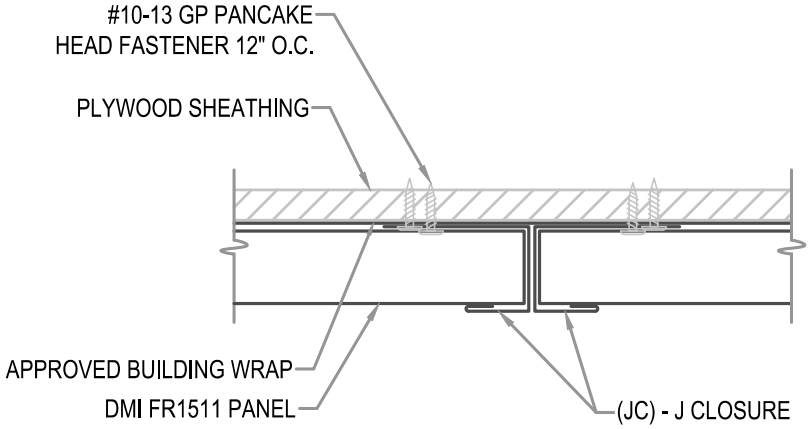

DMI DIMENSIONAL METALS, INC.

PANEL LAP

Detail: FR15-H-10-00

●PROVEN ● DEPENDABLE ● SUSTAINABLE●

METAL ENVELOPE SYSTEMS SINCE 1988

WWW.DMIMETALS.COM

Issue/Rev Date:	Scale:
01/17	3"=1'-0"

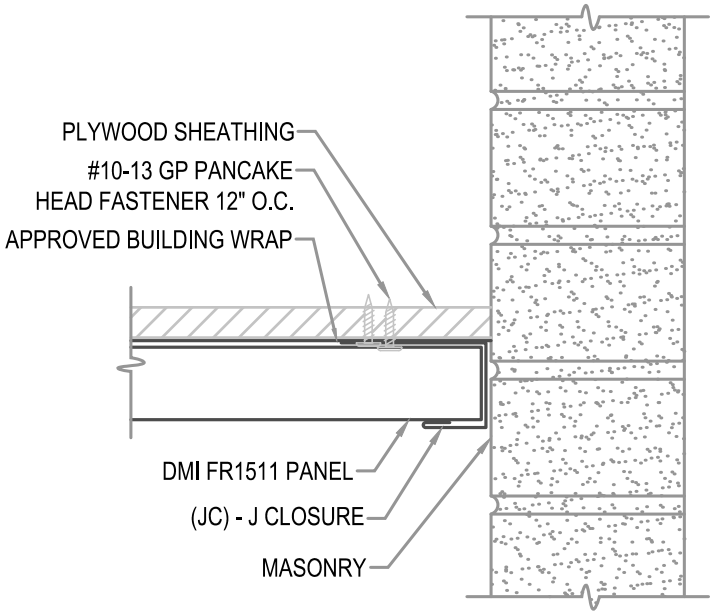

DIMENSIONAL METALS, INC.

WALL PANEL END

Detail: FR15-H-11-00

●PROVEN ● DEPENDABLE ● SUSTAINABLE●

METAL ENVELOPE SYSTEMS SINCE 1988

WWW.DMIMETALS.COM

Issue/Rev Date:	Scale:
01/17	3"=1'-0"